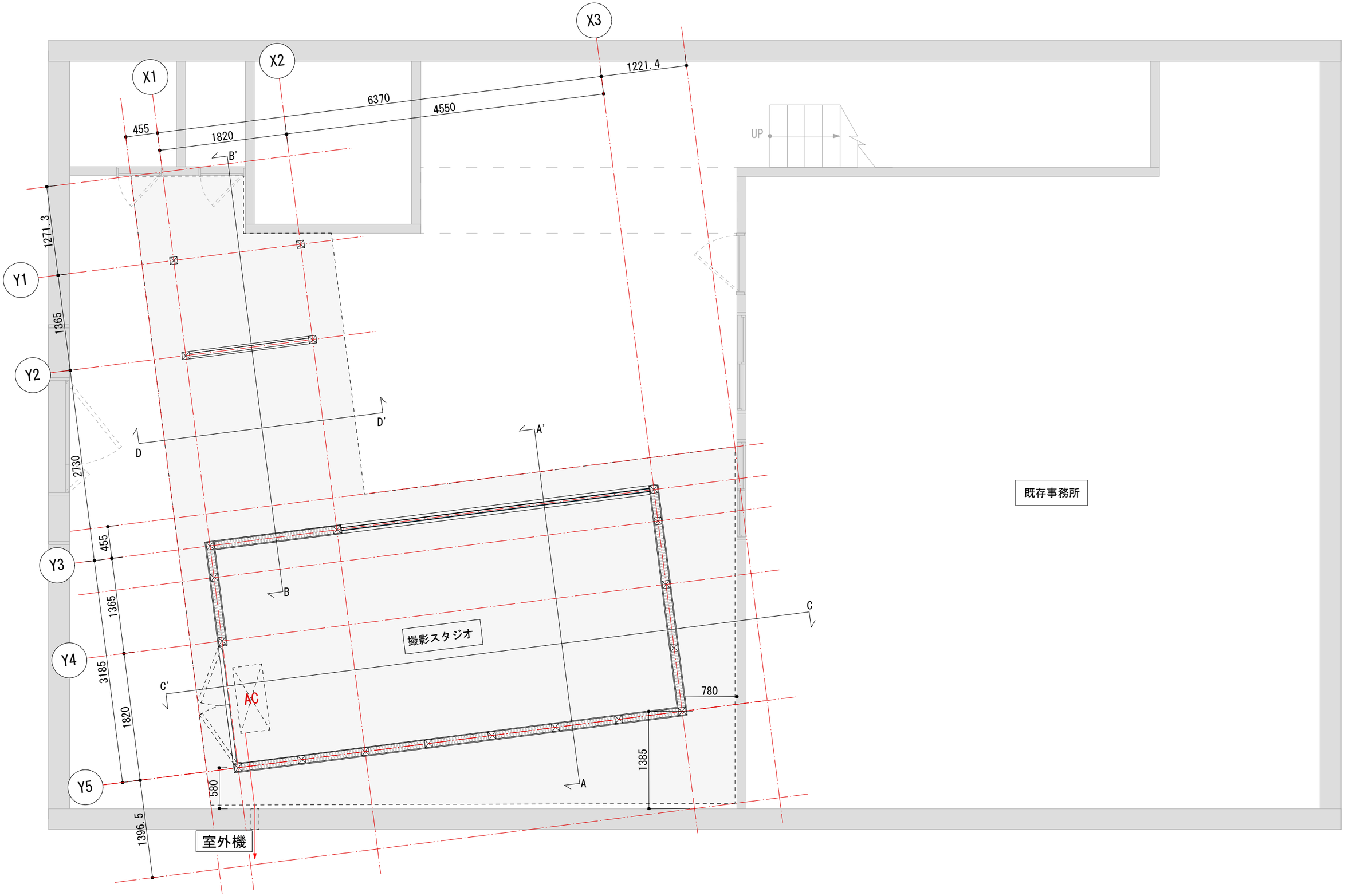

Yoshida+Taniura		work's Will Plant PJ	drawing 配置図	designed Yoshida+Taniura	scale 1/50, A3	date 2021.01.20	no. D — 01

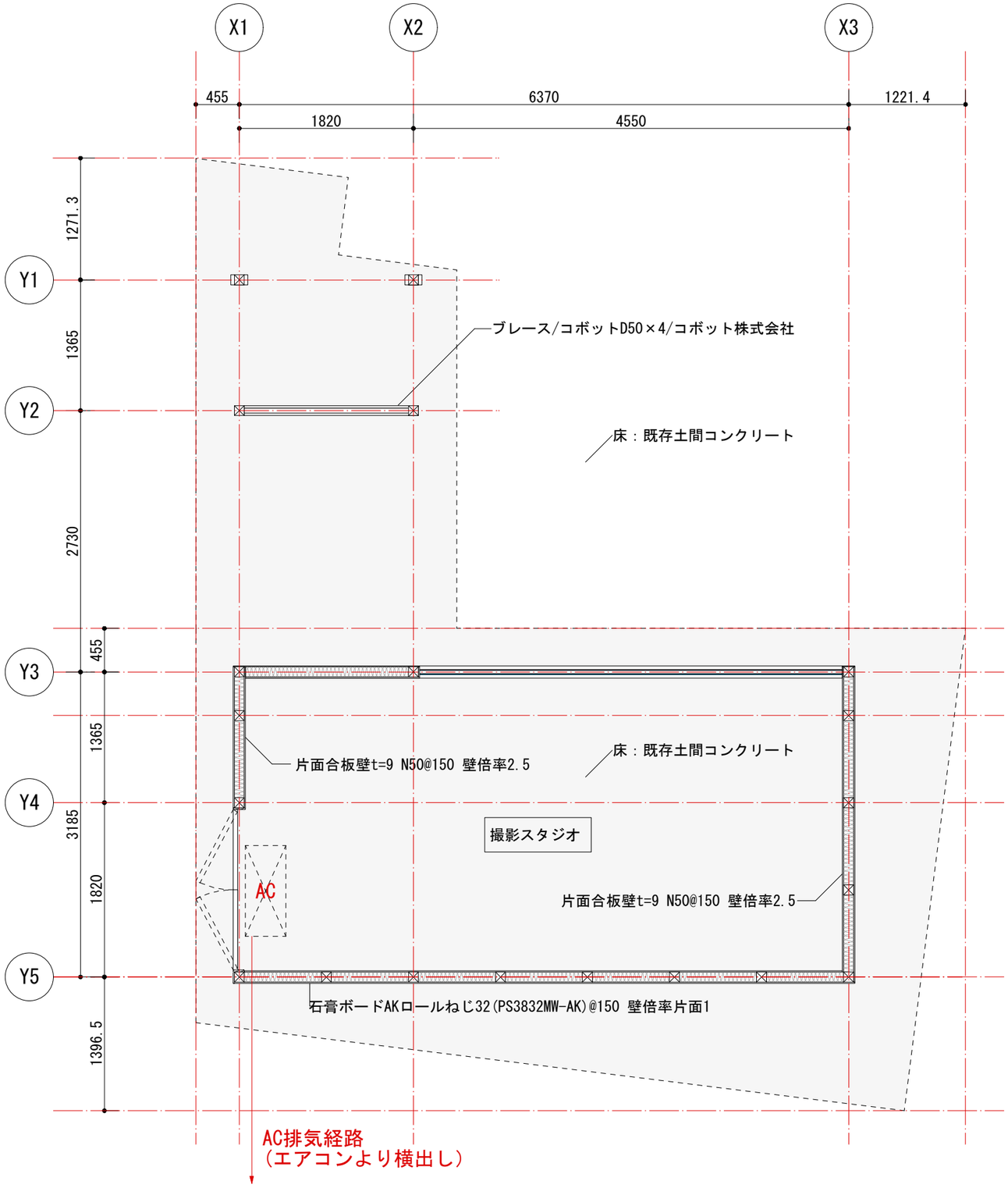

Yoshida+Taniura		work's Will Plant PJ	drawing 平面詳細図	designed Yoshida+Taniura	scale 1/50, A3	date 2021.01.20	no. D — 02

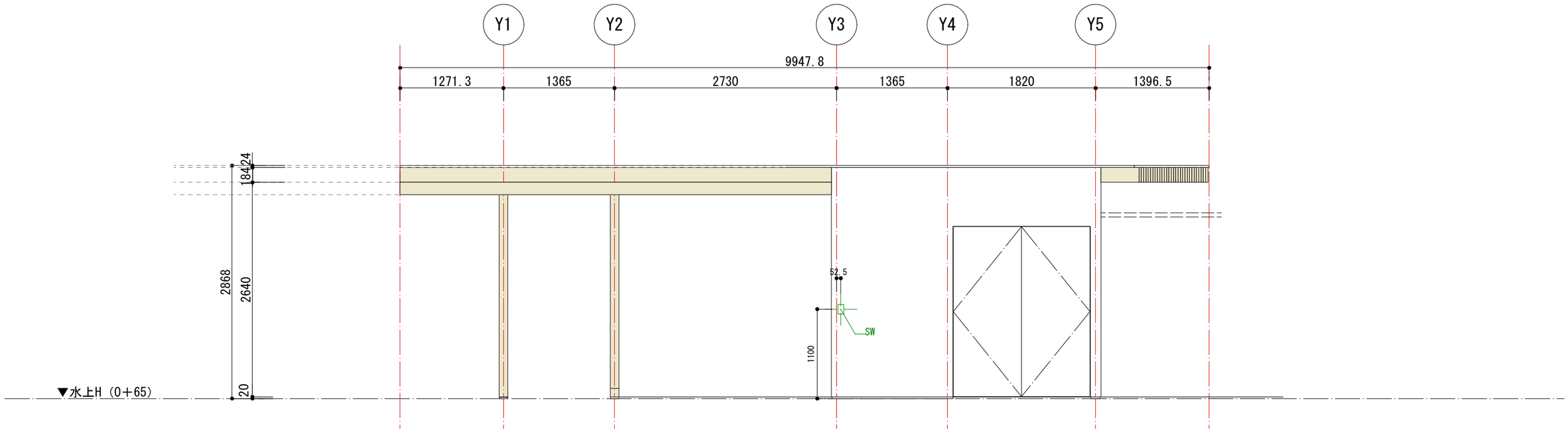

西側立面図

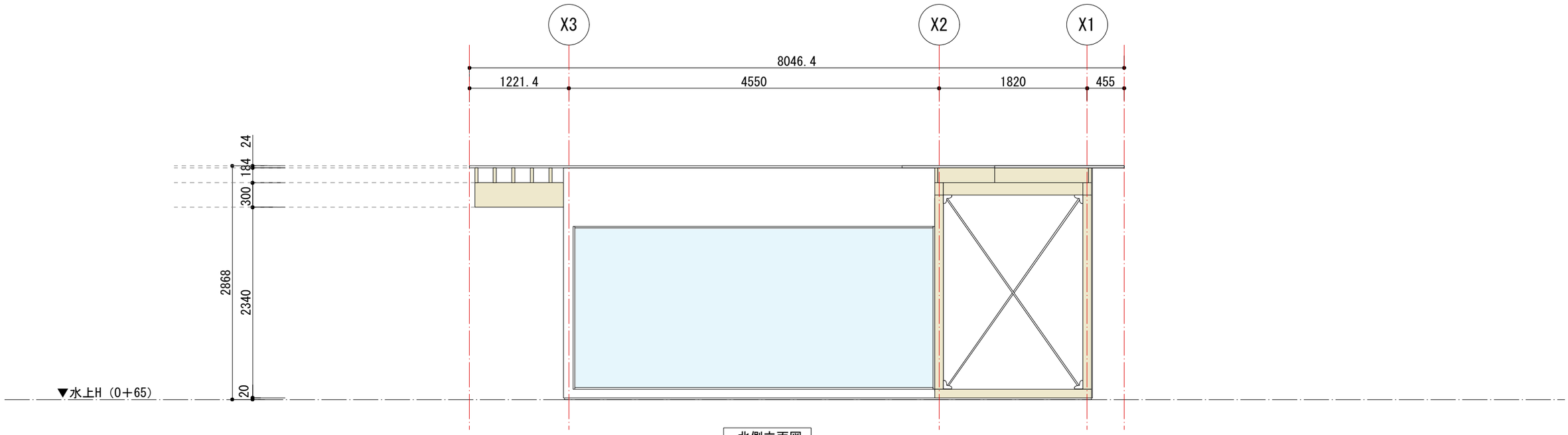

北側立面図

Yoshida+Taniura		work's Will Plant PJ	drawing 立面図	designed Yoshida+Taniura	scale 1/50, A3	date 2021.01.20	no. D — 06

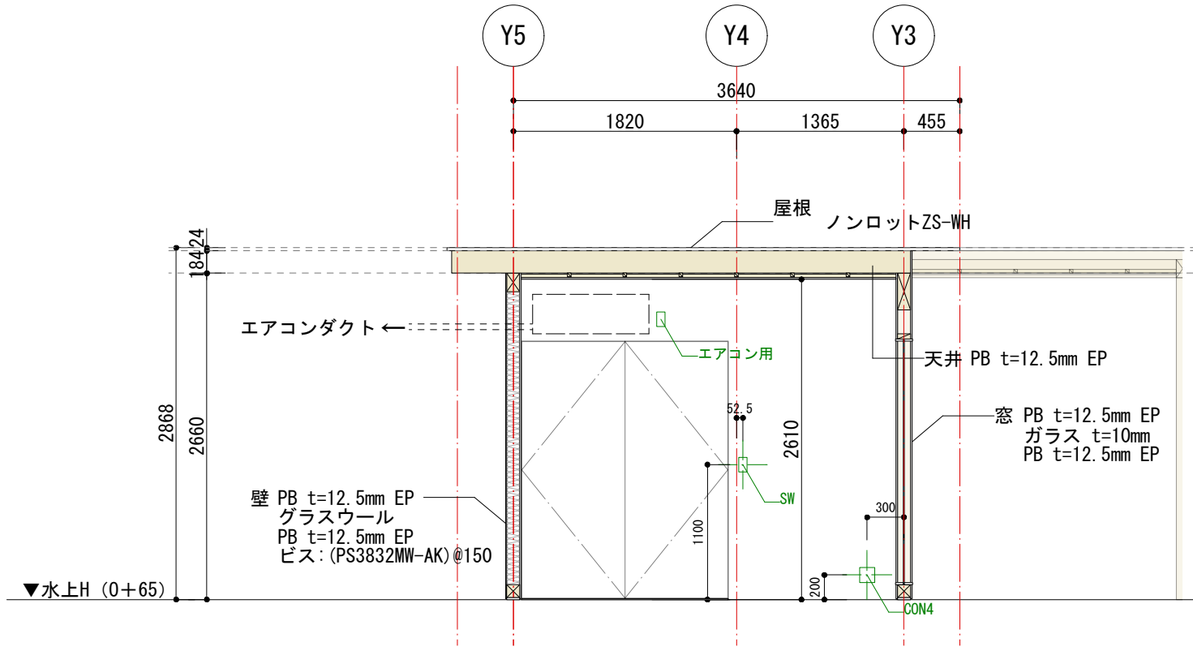

A-A' 断面図

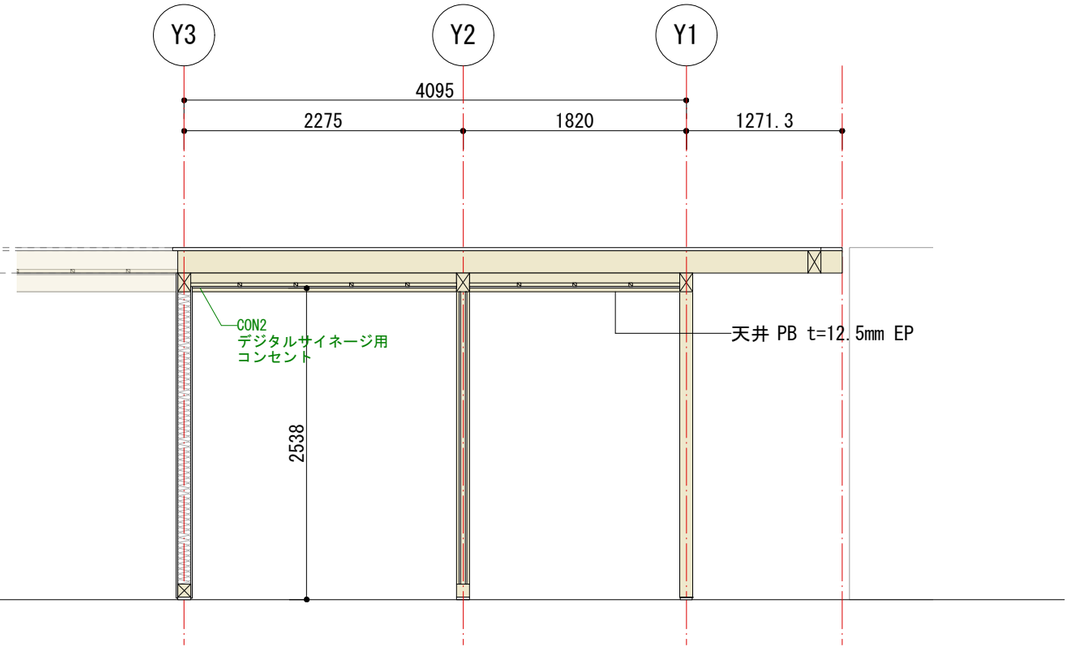

B-B' 断面図

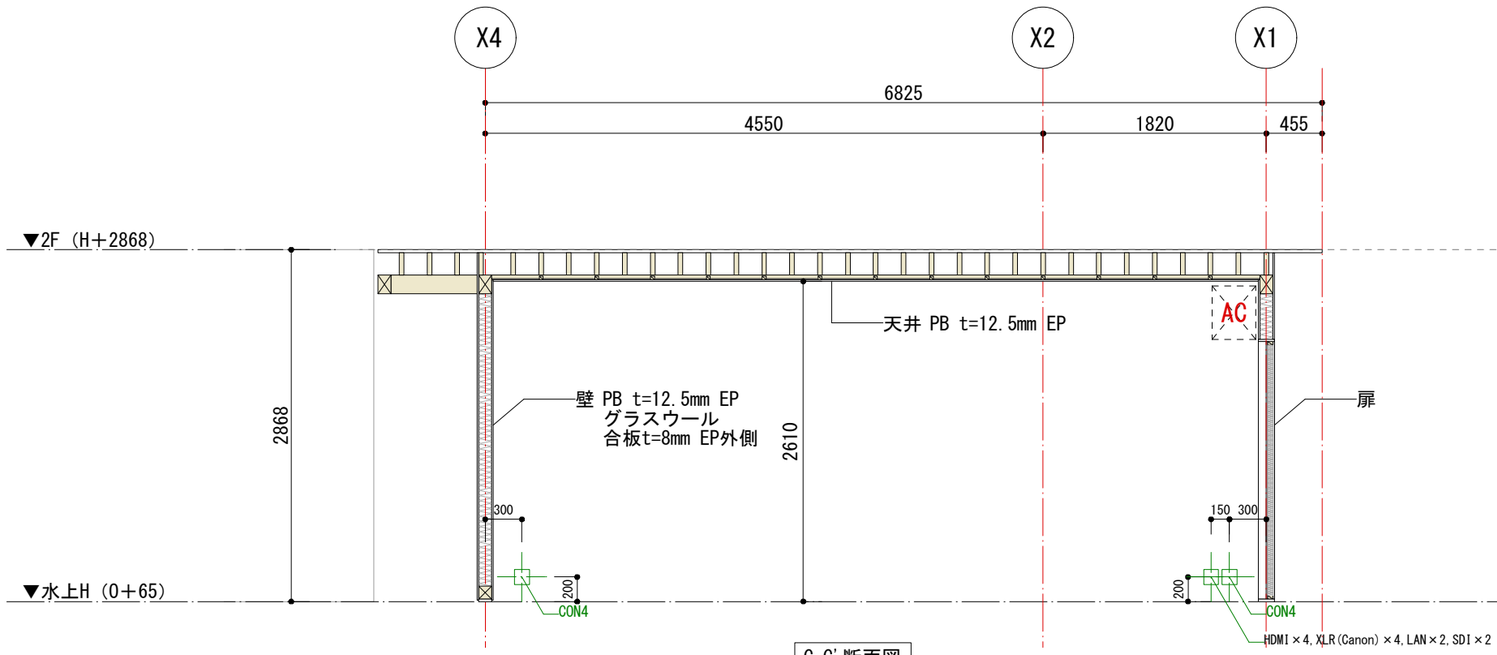

C-C' 断面図

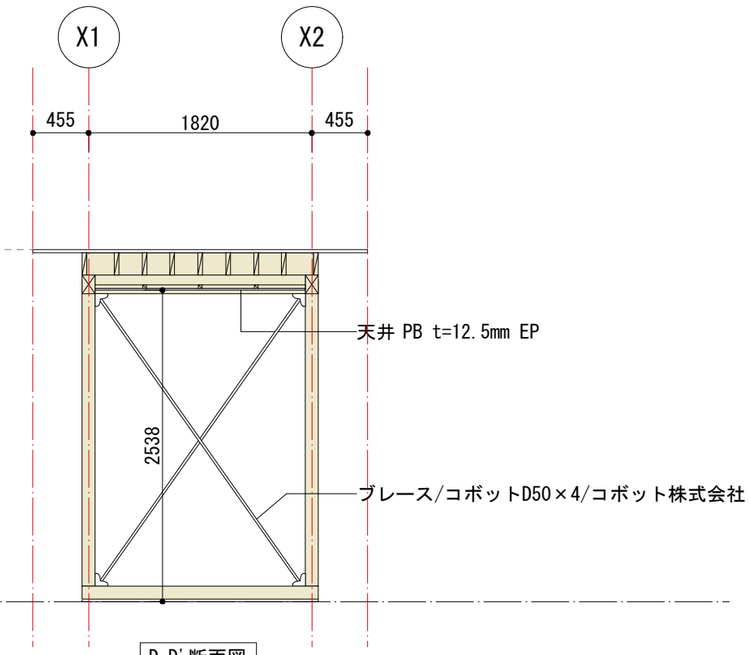

D-D' 断面図

Yoshida+Taniura		work's Will Plant PJ	drawing 断面図	designed Yoshida+Taniura	scale 1/50, A3	date 2021.01.20	no. D — 07

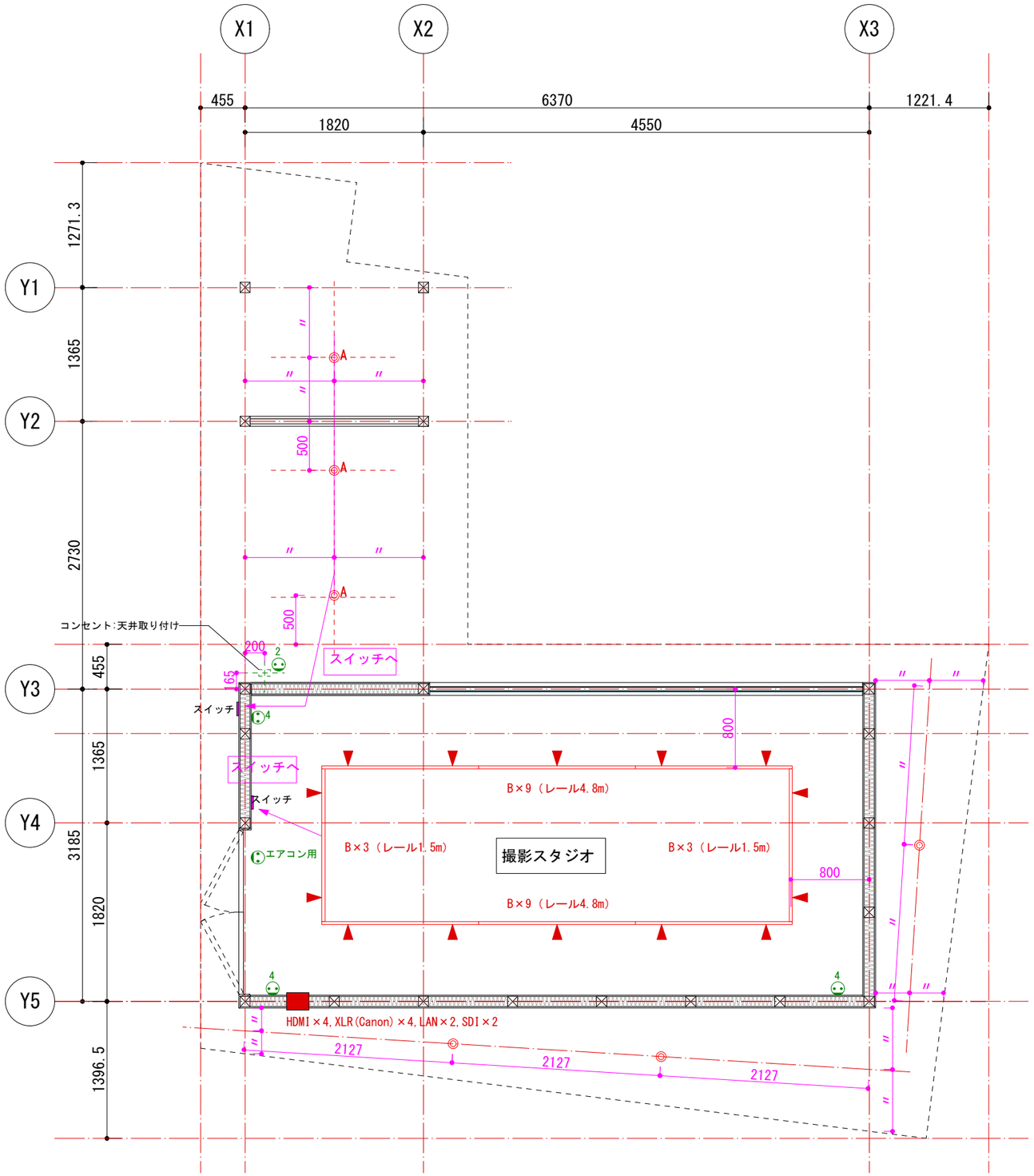

Yoshida+Taniura		work's	drawing	designed	scale	date	no.
		Will Plant PJ	電灯、弱電配置図	Yoshida+Taniura	1/50, A3	2021.01.20	D — 08